RemoteSIM Configurations

User Manual

March 2023

 Copyright @ 2023 Peplink

Introduction **3**
Requirements **3**
Scenario 1: SIM Injector in LAN of Cellular Router **4**
Setup topology 4
Configuring the SIM Injector / SIM Injector Mini 4
Configuring the Cellular Router 5
Scenario 2: SIM Injector in WAN of main Router and multiple Cellular Routers **8**
Setup topology 8
Additional configurations for Cellular Routers 8
Configuration requirements for the main Router 10
Scenario 3: SIM Injector in LAN of main Router and multiple Cellular Routers **11**
Setup topology 11
Main Router configuration 12
Scenario 4: SIM Injector in LAN of main Router and Dome with Starlink **13**
Setup topology 13
Configuring the MAX HD2 router 14
Configuring the SIM Injector 15
Configuring the HD1 Dome Pro 16
Scenario 5: SIM Injector / SIM Injector Mini in a remote location **18**
Setup topology 18
Cellular Router configuration 18
How to check if a Peplink Cellular Router supports RemoteSIM **20**
Monitor the status of the RemoteSIM **20**
Appendix A: Declaration **21**

 Copyright @ 2023 Peplink

Introduction

Peplink has developed a unique technology called RemoteSIM, which allows SIM cards to remotely link to a cellular router. This can be done via cloud or within the same physical network. There are a few key scenarios to fit certain applications.

The purpose of this manual is to provide an introduction on where to start and how to set up for the most common scenarios and uses.

Requirements

- Cellular router that supports RemoteSIM technology.
- SIM Injector.
- SIM card.

Notes:

- Always check for the latest Firmware version for both the cellular router and the SIM Injector. You can also check for the latest Firmware version on the device's WEB configuration page.
- A list of products that support RemoteSIM can be found on the SIM Injector WEB page. Please check under the section **Supported models**.

SIM Injector reset and login details

How to reset a SIM Injector:

- Hold the reset button for 5-10 seconds. Once the LED status light turns RED, the reset button can be released. SIM Injector will reboot and start with the factory default settings.

The default WEB login settings:

- User: admin
- Password: admin
- IP address: the device only has a DHCP client and no fallback IP address.. Therefore, it is advised to check every time what IP address is assigned to the SIM Injector.

Notes:

- The SIM Injector can be monitored via InControl 2. Configuration is not supported.

 Copyright @ 2023 Peplink

Scenario 1: SIM Injector in LAN of Cellular Router

Setup topology

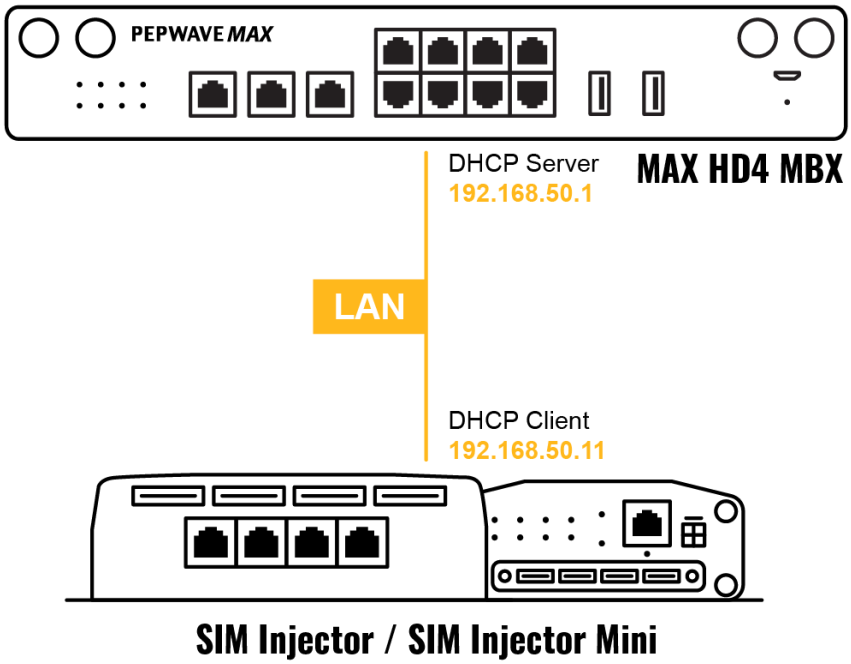

This is the most basic scenario in which the SIM Injector / SIM Injector Mini (hereinafter referred to as SIM Injector) is connected directly to the cellular router's LAN port via an ethernet cable. This allows for the cellular router to be positioned for the best possible signal. Meanwhile, the SIM cards can be conveniently located in other locations such as the office, passenger area, or the bridge of a ship. The SIM Injector allows for easily swapping SIM cards without needing to access a cellular router.

IMPORTANT: Cellular WAN will not fallback to the local SIM if it is configured to use the SIM Injector.

Configuring the SIM Injector / SIM Injector Mini

1. Connect the SIM Injector to the LAN port of the cellular router.
2. Insert SIM cards into the SIM Injector. The SIM cards will be automatically detected.

IMPORTANT: SIM cards inserted into SIM Injector must not have a PIN code.

 Copyright @ 2023 Peplink

Note 1: The SIM Injector gets its IP address via DHCP and doesn't have a static IP address. To find it's address, please check the DHCP lease on the cellular router.

Configuring the Cellular Router

Step 1. Enable the SIM Injector communication protocol.

1a. If you are using a Balance cellular router, go to the **Network** tab (top navigation bar).
1b. If you are using a MAX cellular router, go to the **Advanced** tab (top navigation bar).
2. Under **Misc. settings** (left navigation bar) find **Remote SIM Management**.
3. In **Remote SIM Management**, click on the edit icon next to **Remote SIM is Disabled**.

4. Check the **Auto LAN discovery** checkbox and click **Save** and **Apply Changes**.

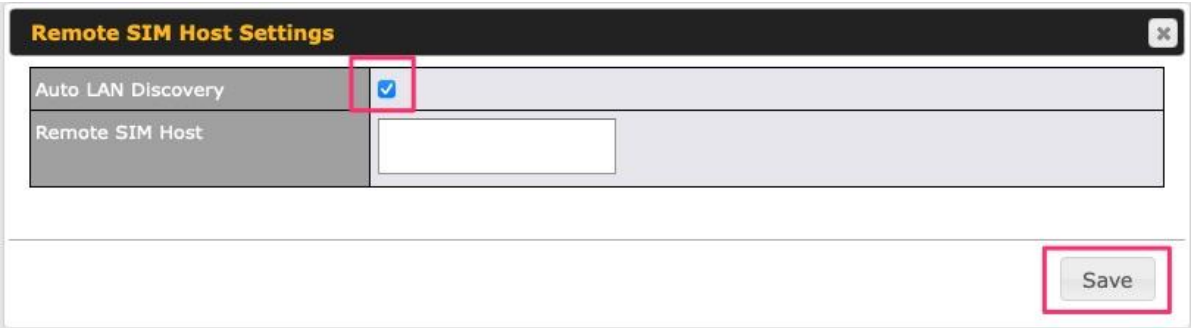

5. Click **Save** and then **Apply Changes**.

Step 2. Enable RemoteSIM for the selected Cellular interface.

1. Go to **Network** (top navigation bar), then **WAN** (left navigation bar) and click **Details** for a selected cellular WAN. This will open the WAN Connection Settings page.

2. Scroll down to **Cellular settings**.
3. In the **SIM Card** section, select **Use Remote SIM Only**.

 Copyright @ 2023 Peplink

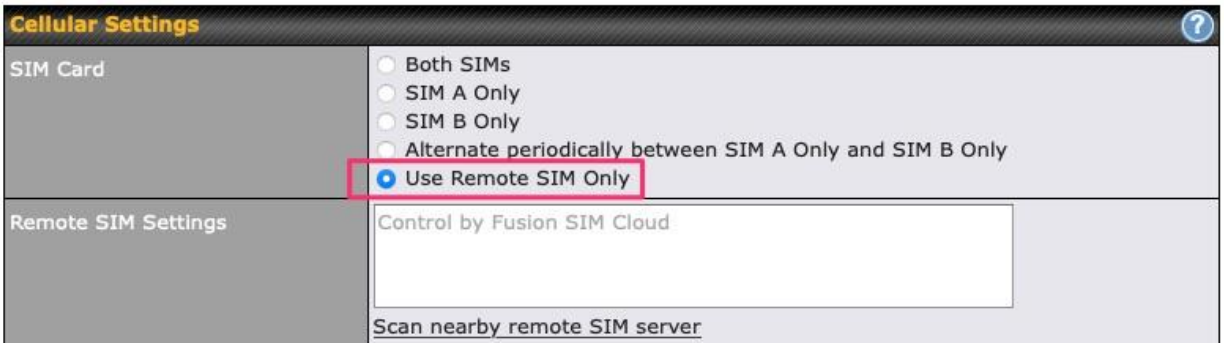

4. Enter configuration settings in the **Remote SIM Settings** section. Click on **Scan nearby remote SIM server** to show the serial number(s) of the connected SIM Injector(s). Available configuration options for cellular interface are shown below:

A. Defining SIM Injector(s)
   - Format: <S/N>
   - Example 1: 1111-2222-3333
   - Example 2: 1111-2222-3333 4444-5555-6666

B. Defining SIM Injector(s) SIM slot(s):
   - Format: <S/N:slot number>
   - Example 1: 1111-2222-3333:7,5 (the Cellular Interface will use SIM in slot 7, then 5)
   - Example 2: 1111-2222-3333:1,2 1111-2222-3333:3,4 (the cellular Interface will use SIM in slot 1, then in 2 from the first SIM Injector, and then it will use 3 and 4 from the second SIM Injector).

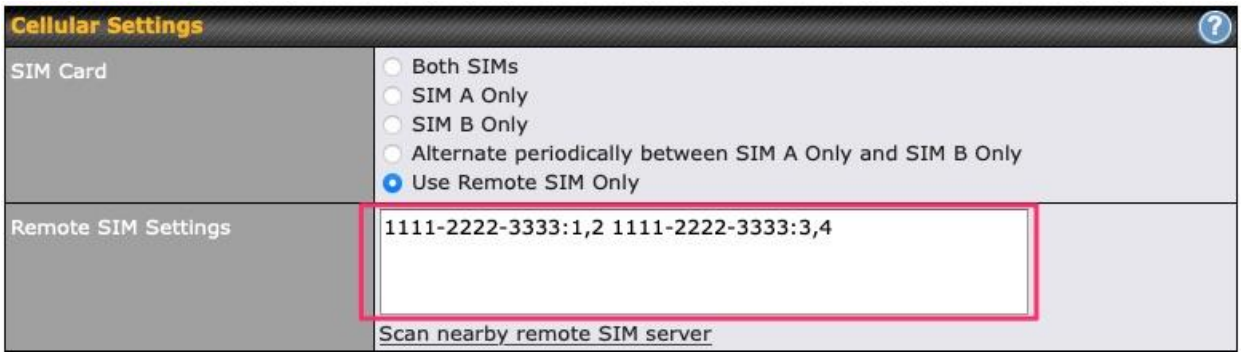

Note: It is recommended to use different SIM slots for each cellular interface.

5. Click **Save** and **Apply Changes**.

 Copyright @ 2023 Peplink

Step 3. (Optional) Custom SIM cards settings.

1a. For a Balance router, go to the **Network** (Top tab).
1b. For a MAX router, go to the **Advanced** (Top tab).
2. Under **Misc. settings** (Left-side tab) find **Remote SIM Management**.
3. Click on the **Add Remote SIM** button, fill in all the required info and click **Save**. This section allows defining custom requirements for a SIM card located in a certain SIM slot:
   - Enable/Disable roaming (by default roaming is disabled).
   - Add Custom mobile operator settings (APN, user name, password).
4. Repeat configuration for all SIM cards which need custom settings.
5. Click **Apply Changes** to take effect.

 Copyright @ 2023 Peplink

Scenario 2: SIM Injector in WAN of main Router and multiple Cellular Routers

Setup topology

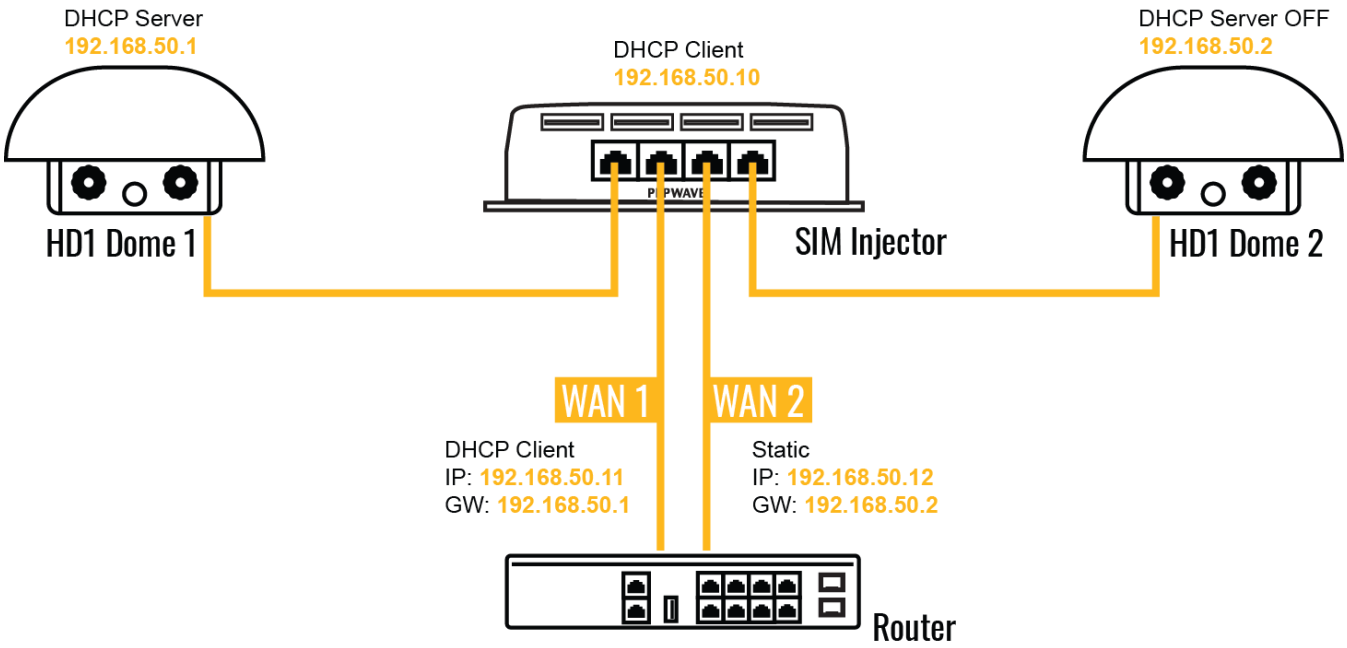

In this scenario, each HD Dome creates a WAN connection to the main router. A single SIM Injector is used to provide SIM cards for each HD Dome. The HD Dome can be replaced with any Peplink cellular router supporting RemoteSIM technology.

This scenario requires the completion of the configuration steps shown in Scenario 1 in addition to the configuration steps explained below.

 Copyright @ 2023 Peplink

Additional configurations for Cellular Routers

Step 1. Disable the DHCP server.

- HD Dome 1 should act as a DHCP server.
- HD Dome 2 should be configured to have a static IP address with DHCP disabled.
- Both routers should be in the same subnet (e.g. 192.168.50.1 and 192.168.50.2).

1. Go to **Network** (Top tab), then **Network Settings** (Left-side tab), and click on **Untagged LAN**. This will open up the LAN settings page.
2. Change the IP address to 192.168.50.2.
3. In the **DHCP Server** section, uncheck the checkbox to disable DHCP Server.
4. Click **Save** and **Apply Changes**.

Step 2. Ethernet port configuration

The Ethernet port must be set to **ACCESS** mode for each HD Dome. To do this, dummy VLANs need to be created first.

1. Go to **Network** (Top tab), then **Network Settings** (Left-side tab), and click on **New LAN**. This will open the settings page to create a dummy VLAN.
2. The image below shows the values that need to be changed to create a new VLAN:

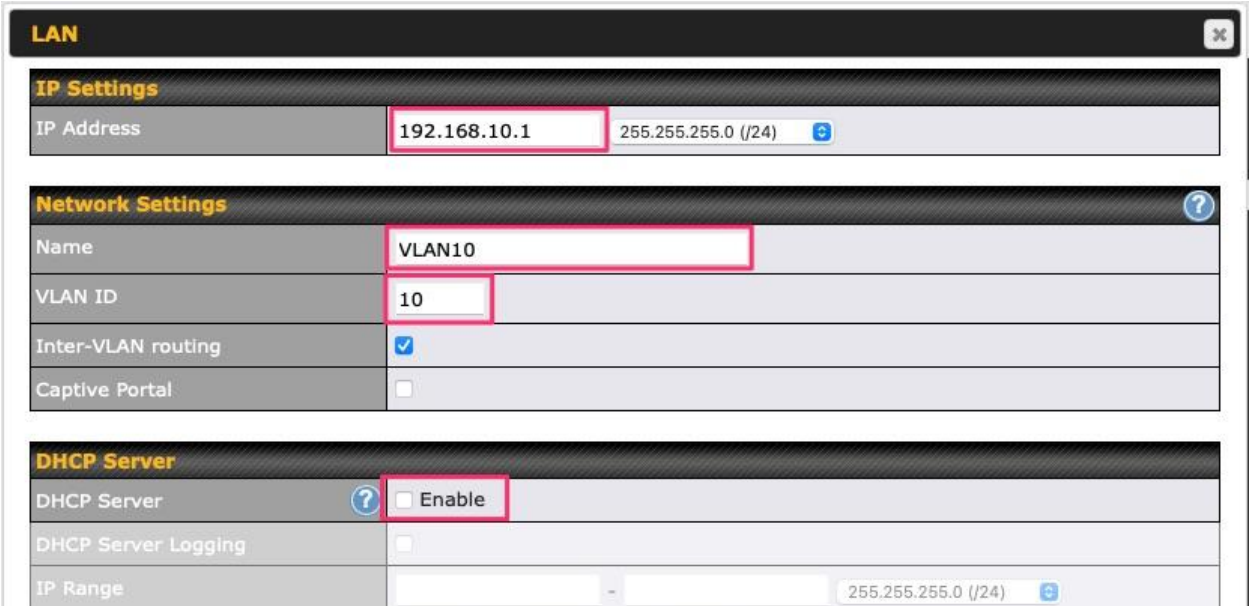

Note: set different IP addresses for each HD dome (e.g. 192.168.10.1 and 192.168.10.2).

 Copyright @ 2023 Peplink

3. Click Save and **Apply Changes**.
4. Go to **Network** (Top tab), then **Port Settings** (Left-side tab).
5. Set the Port Type to **Access** and set VLAN to **Untagged LAN** (see picture below).

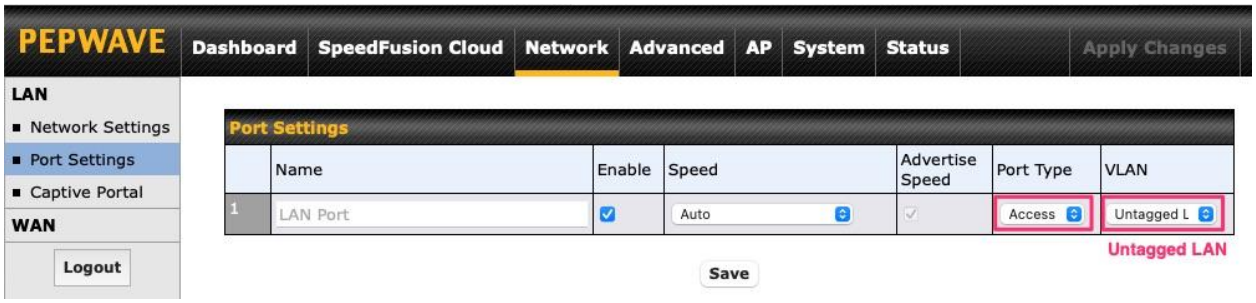

6. Click **Save** and **Apply Changes**.

Configuration requirements for the main Router

Requirements for the main router are:

- Configure **WAN 1** as a DHCP client.
- **WAN 1** will automatically get the Gateway IP address from HD Dome 1.
- Configure **WAN 2** as a Static IP and set it to 192.168.50.12.
- Configure **WAN 2** Gateway to 192.168.50.2. Same as the HD Dome 2's IP address.

 Copyright @ 2023 Peplink

Scenario 3: SIM Injector in LAN of main Router and multiple Cellular Routers

Setup topology

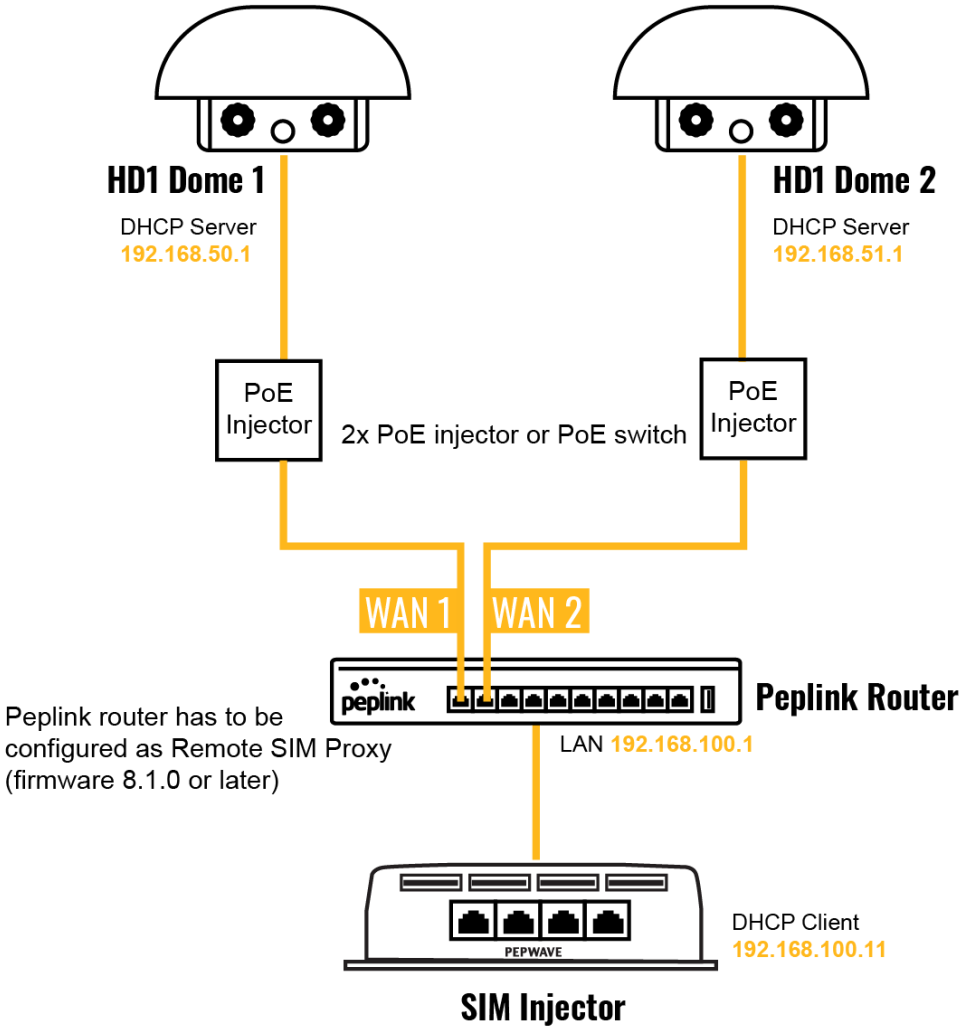

In this scenario, SIMs are provided to the HD Domes via the main router. In this example, the **Remote SIM Proxy** functionality needs to be enabled on the main router.

Notes:

- HD Dome can be replaced with any other cellular router that supports RemoteSIM.

 Copyright @ 2023 Peplink

- It is recommended to use Peplink Balance series or X series routers as the main router.

This scenario requires the completion of the configuration steps for the cellular router and the SIM Injector as in Scenario 1. The configuration for the main router is explained below.

Main Router configuration

IMPORTANT: Main router LAN side and Cellular Routers must be configured using different subnets, e.g. 192.168.**50**.1/24 and 192.168.**100**.1/24.

Note: please make sure the Peplink router is running Firmware 8.1.0 or above.

1. Open the main router WEB interface and change:
From <IP address>/cgi-bin/MANGA/**index.cgi** to <IP address>/cgi-bin/MANGA/**support.cgi**.

This will open the support.cgi page.

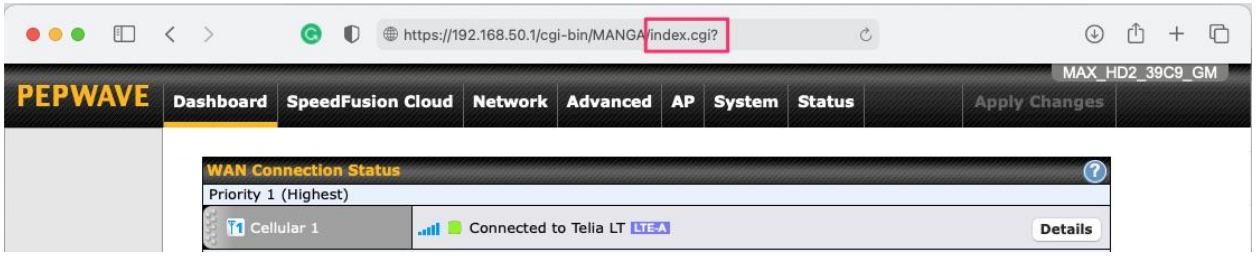

2. Scroll down to find **Remote SIM Proxy** and click on **[click to configure]** that is located next to it.
3. Check the **Enable** checkbox.
4. Click on **Save**.
5. Go back to the index.cgi page and click on **Apply Changes**.

 Copyright @ 2023 Peplink

Scenario 4: SIM Injector in LAN of main Router and Dome with Starlink

Setup topology

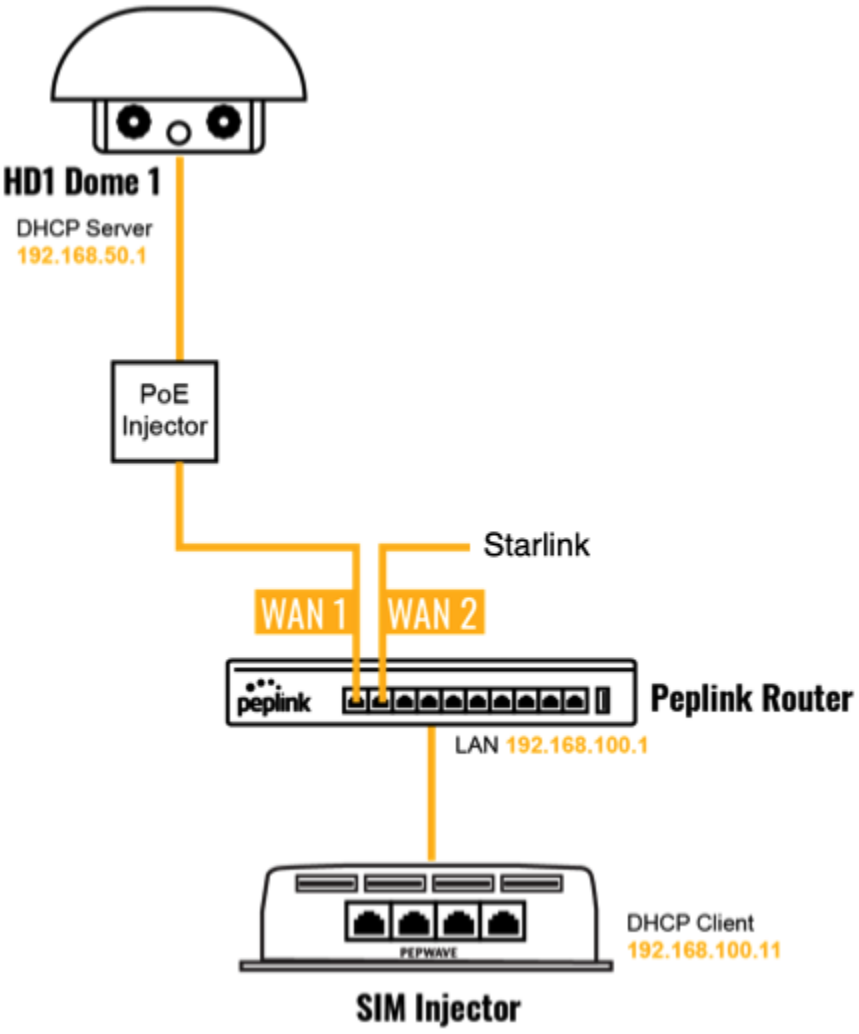

Equipment used:

- HD1 Dome Pro (MAX-HD1-DOM-PRO-5GD), FW version 8.2.1
- MAX HD2 (MAX-HD2-LTEA-W-T), FW version 8.2.1
- SIM Injector Mini (SIM-MINI-8-1E), FW version 1.1.120

 Copyright @ 2023 Peplink

Configuring the MAX HD2 router

IMPORTANT: Main router LAN side and Cellular Routers must be configured using different subnets, e.g. 192.168.**50**.1/24 and 192.168.**100**.1/24.

Step 1. Change router subnet to 192.168.100.1/24.

1. Go to Network tab, then click on LAN network

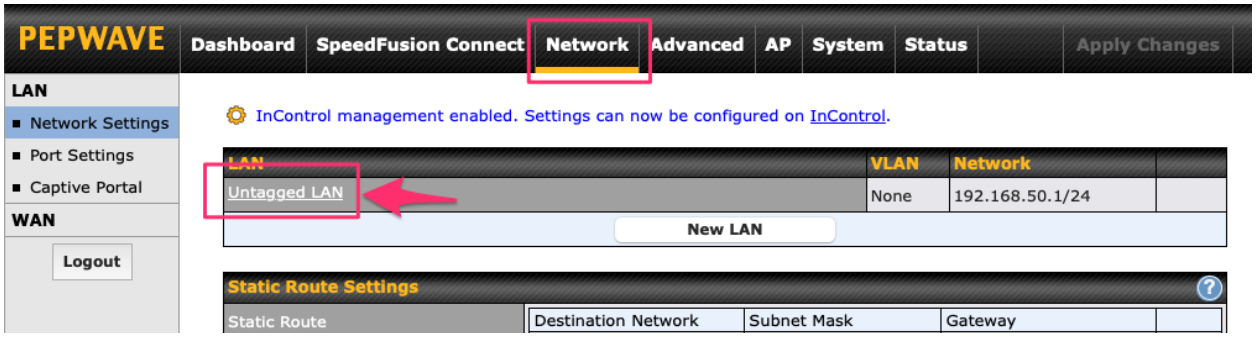

2. Change IP addresses to the new subnet:

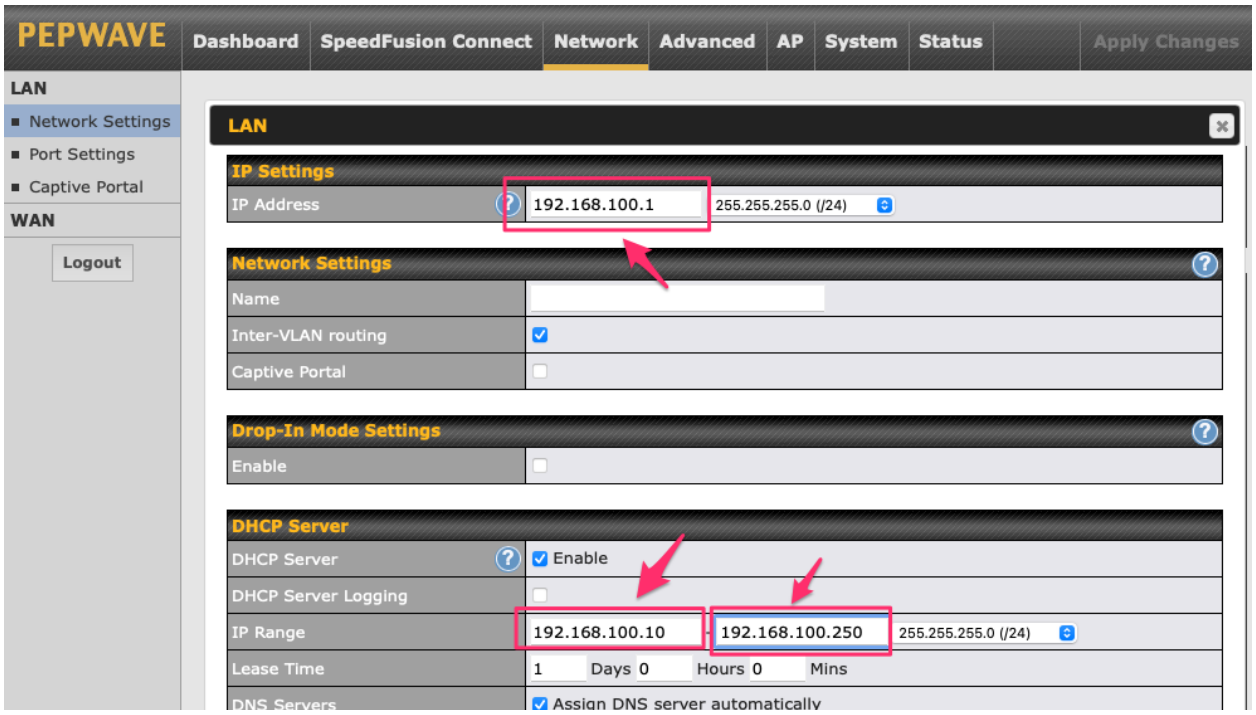

3. Click on **Save**.

 Copyright @ 2023 Peplink

4. Go back to the index.cgi page and click on **Apply Changes**.

Step 2. Enable the Remote SIM Proxy

1. Open the main router WEB interface and change:

From 192.168.100.1/cgi-bin/MANGA/**index.cgi** to 192.168.100.1/cgi-bin/MANGA/**support.cgi**

2. Scroll down to find **Remote SIM Proxy** and click on **[click to configure]** that is located next to it.
3. Check the **Enable** checkbox.

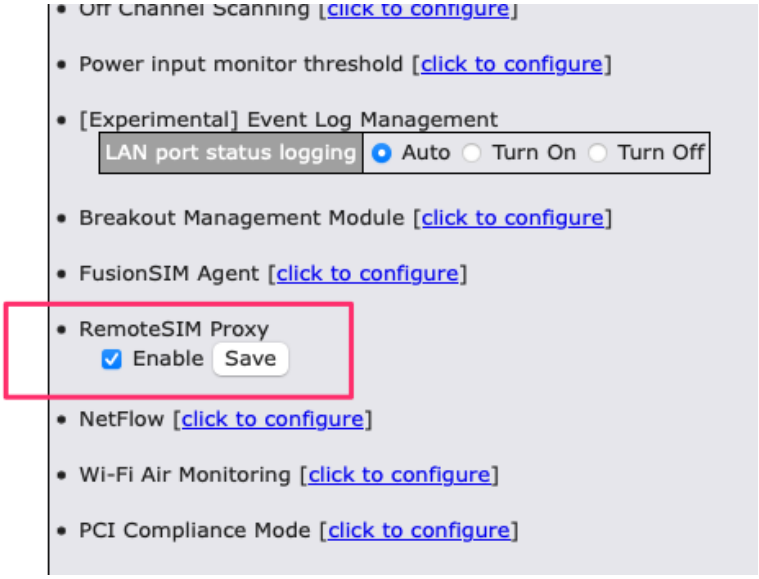

4. Click on **Save**.

5. Go back to the index.cgi page and click on **Apply Changes**.

Configuring the SIM Injector

There is no need to configure a SIM Injector mini. Once the HD2 router configuration is finished you power on SIM Injector mini.

IMPORTANT: in case SIM Injector Mini was connected to HD2 before its configuration, then need to power off and then power on SIM Injector Mini.

 Copyright @ 2023 Peplink

Configuring the HD1 Dome Pro

Step 1. Enable the SIM Injector communication protocol.

1. By default the HD1 Dome Pro IP address is 192.168.50.1. Open WEB based configuration interface and then go to **Advanced** tab (top navigation bar).
2. Under **Misc. settings** (left navigation bar) find **Remote SIM Management**.
3. In **Remote SIM Management**, click on the edit icon next to **Remote SIM is Disabled**.

4. Check the **Auto LAN discovery** checkbox and click **Save** and **Apply Changes**.

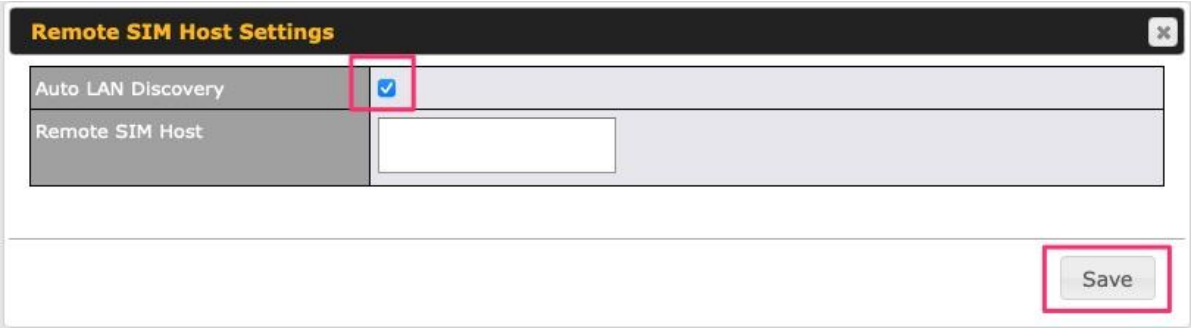

5. Click **Save** and then **Apply Changes** and reboot the HD1 Dome Pro.

Step 2. Enable RemoteSIM for the selected Cellular interface.

1. Go to **Network** (top navigation bar), then **WAN** (left navigation bar) and click **Details** for a selected cellular WAN. This will open the WAN Connection Settings page.

2. Scroll down to **Cellular settings**.
3. In the **SIM Card** section, select **Use Remote SIM Only**.

 Copyright @ 2023 Peplink

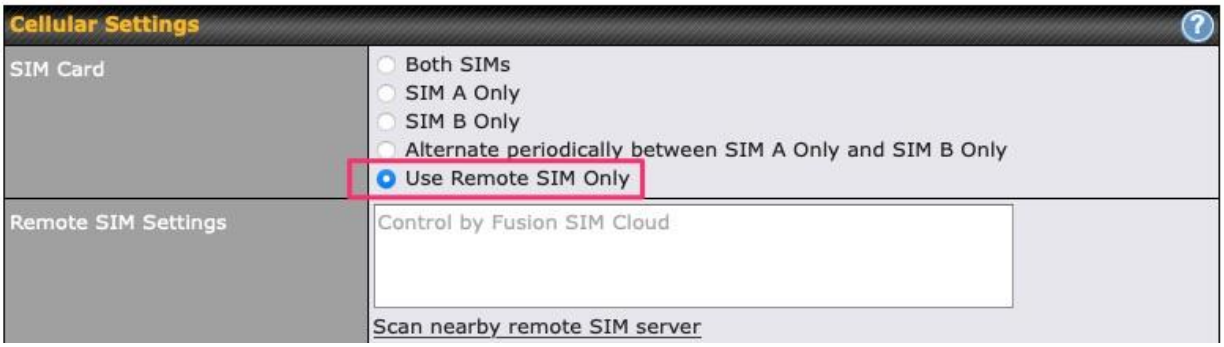

4. Click **Scan nearby remote SIM server.** The system must find the SIM Injector Mini serial number as shown below.

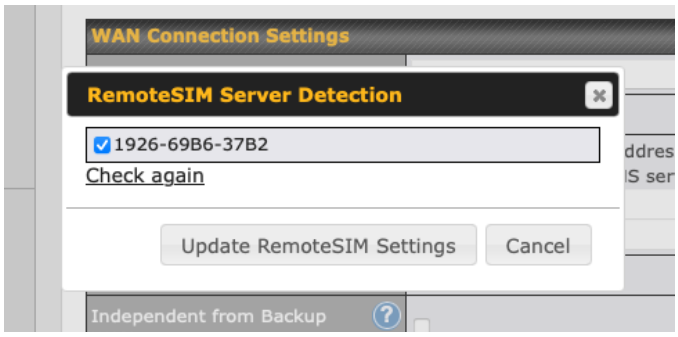

5. Click Update RemoteSIM Settings.
6. Click **Save** and **Apply Changes**.

Step 3. (Optional) Custom SIM cards settings.

1. For a MAX router, go to the **Advanced** (Top tab).
2. Under **Misc. settings** (Left-side tab) find **Remote SIM Management**.
3. Click on the **Add Remote SIM** button, fill in all the required info and click **Save**. This section allows defining custom requirements for a SIM card located in a certain SIM slot:
   - Enable/Disable roaming (by default roaming is disabled).
   - Add Custom mobile operator settings (APN, user name, password).
4. Repeat configuration for all SIM cards which need custom settings.
5. Click **Apply Changes** to take effect.

 Copyright @ 2023 Peplink

Scenario 5: SIM Injector / SIM Injector Mini in a remote location

Setup topology

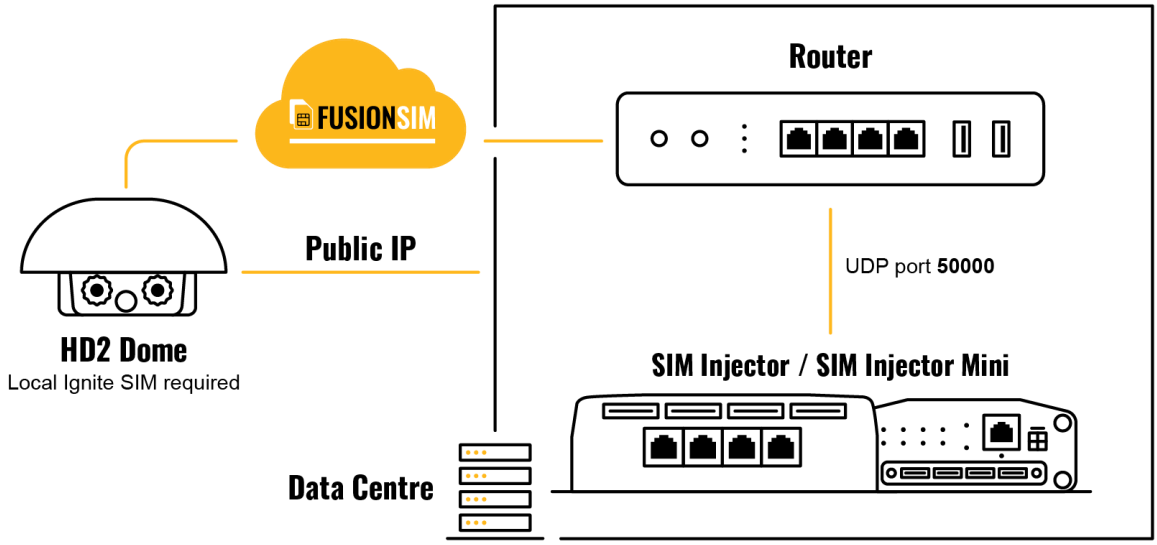

Requirements for installing a SIM Injector / SIM Injector Mini (hereinafter referred to as SIM Injector) in a remote location:

- Cellular router communicates with the SIM Injector via UDP port 50000. Therefore this port must be reachable via public IP over the Internet.
- The one way latency between the cellular router and the SIM Injector should be **up to 250 ms.** A higher latency may lead to instability issues.
- The cellular router must have Internet connection to connect to the SIM Injector. It can be another Internet connection via Ethernet or Fiber if possible, or a secondary cellular interface with a local SIM (Ignite SIM).
- Due to its high latency, it is not recommended to use satellite WAN for connecting to a SIM Injector in remote locations.

SIM Injector configuration is the same as in Scenario 1.

Cellular Router configuration

 Copyright @ 2023 Peplink

Step 1. Enable the SIM Injector communication protocol.

1a. For a Balance cellular router, go to the **Network** (Top tab).
1b. For a MAX cellular router, go to the **Advanced** (Top tab).
2. Under **Misc. settings** (Left-side tab), find **Remote SIM Management**.
3. In **Remote SIM Management**, click on the edit icon next to **Remote SIM is Disabled.**
4. Enter the public IP of the SIM Injector and click **Save** and **Apply Changes**.

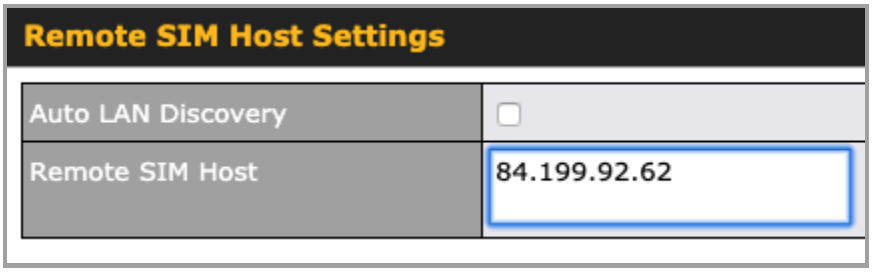

Notes:

- Do NOT check **Auto LAN Discovery**.
- Adding a SIM Injector serial number to the **Remote SIM Host** field is a mistake!

Step 2. RemoteSIM and custom SIM card settings configurations are the same as in Scenario 1.

 Copyright @ 2023 Peplink

How to check if a Peplink Cellular Router supports RemoteSIM

1. Go to **Network** (Top tab), then **WAN** (Left-side tab), and click **Details** on any cellular WAN. This will open the WAN Connection Settings page.
2. Scroll down to **Cellular settings**.

If you can see the **Remote SIM Settings** section, then the cellular router supports RemoteSIM.

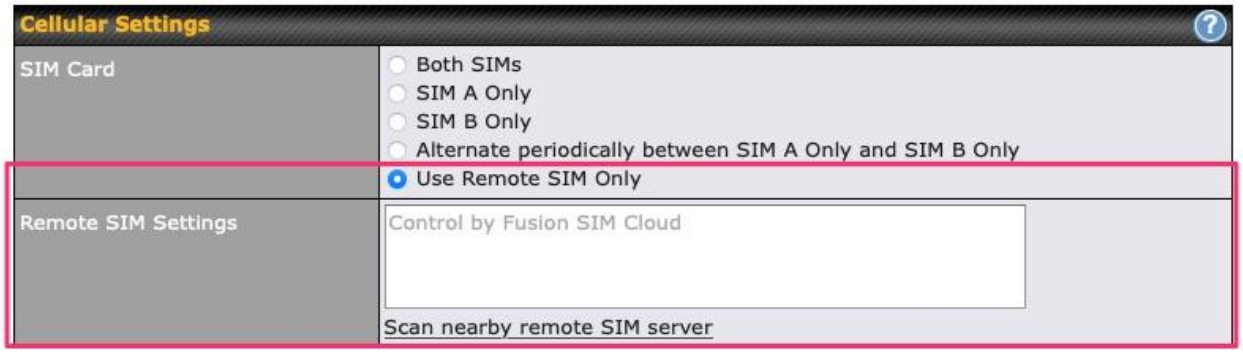

Monitor the status of the RemoteSIM

1. Go to **Network** (Top tab), then **WAN** (Left-side tab), and click **Details** on the cellular WAN which was configured to use RemoteSIM.
2. Check the **WAN Connection Status** section. Within the cell WAN details, there is a section for **Remote SIM** (SIM card IMSI, SIM Injector serial number and SIM slot).

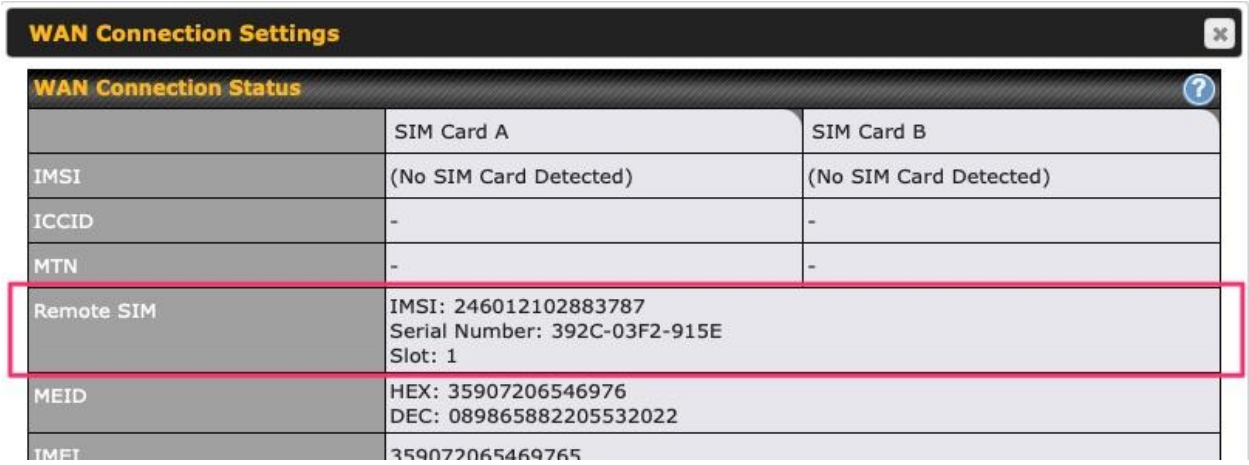

 Copyright @ 2023 Peplink

Appendix A: Declaration

FCC Requirements for Operation in the United States
Federal Communications Commission (FCC) Compliance Notice:

For SIM Injector

Federal Communication Commission Interference Statement

Any changes or modifications not expressly approved by the party responsible for compliance could void your authority to operate the equipment.

This equipment has been tested and found to comply with the limits for a Class B digital device, pursuant to part 15 of the FCC Rules. These limits are designed to provide reasonable protection against harmful interference in a residential installation. This equipment generates, uses and can radiate radio frequency energy and, if not installed and used in accordance with the instructions, may cause harmful interference to radio communications. However, there is no guarantee that interference will not occur in a particular installation. If this equipment does cause harmful interference to radio or television reception, which can be determined by turning the equipment off and on, the user is encouraged to try to correct the interference by one or more of the following measures:

—Reorient or relocate the receiving antenna.
—Increase the separation between the equipment and receiver.
—Connect the equipment into an outlet on a circuit different from that to which the receiver is connected.
—Consult the dealer or an experienced radio/TV technician for help.

This device complies with Part 15 of the FCC Rules. Operation is subject to the following two conditions:
(1) this device may not cause harmful interference and
(2) this device must accept any interference received, including interference that may cause undesired operation.

Industry Canada Statement

This product meets the applicable Innovation, Science and Economic Development Canada technical specifications.

 Copyright @ 2023 Peplink

Le présent produit est conforme aux spécifications techniques applicables d'Innovation, Sciences et Développement économique Canada.

This device contains licence-exempt transmitter(s)/receiver(s) that comply with Innovation, Science and Economic Development Canada's licence-exempt RSS(s). Operation is subject to the following two conditions:

(1) This device may not cause interference.

(2) This device must accept any interference, including interference that may cause undesired operation of the device.

Le present appareil est conforme aux CNR d'Industrie Canada applicables aux appareils radio ex-empts de licence. L'exploitation est autorisee aux deux conditions suivantes:

(1) l'appareil ne doit pas produire de brouillage, et

(2) l'utilisateur de l'appareil doit accepter tout brouillage radioelectrique subi, meme si le brouillage est susceptible d'en

 Copyright @ 2023 Peplink

FCC Requirements for Operation in the United States
Federal Communications Commission (FCC) Compliance Notice:

For SIM Injector Mini

Federal Communication Commission Interference Statement

Any changes or modifications not expressly approved by the party responsible for compliance could void your authority to operate the equipment.

This equipment has been tested and found to comply with the limits for a Class B digital device, pursuant to part 15 of the FCC Rules. These limits are designed to provide reasonable protection against harmful interference when the equipment is operated in a commercial environment. This equipment generates, uses, and can radiate radio frequency energy and, if not installed and used in accordance with the instruction manual, it may cause harmful interference to radio communications. Operation of this equipment in a residential area is likely to cause harmful interference, in which case the user will be required to correct the interference at his own expense.

This device complies with Part 15 of the FCC Rules. Operation is subject to the following two conditions:

(1) this device may not cause harmful interference and

(2) this device must accept any interference received, including interference that may cause undesired operation.

Industry Canada Statement

This product meets the applicable Innovation, Science and Economic Development Canada technical specifications.

Le présent produit est conforme aux spécifications techniques applicables d'Innovation, Sciences et Développement économique Canada.

This device contains licence-exempt transmitter(s)/receiver(s) that comply with Innovation, Science and Economic Development Canada’s licence-exempt RSS(s). Operation is subject to the following two conditions:

(1) This device may not cause interference.

(2) This device must accept any interference, including interference that may cause undesired operation of the device.

 Copyright @ 2023 Peplink

Le present appareil est conforme aux CNR d'Industrie Canada applicables aux appareils radio ex-empts de licence. L'exploitation est autorisee aux deux conditions suivantes:

(1) l’appareil ne doit pas produire de brouillage, et

(2) l’utilisateur de l’appareil doit accepter tout brouillage radioelectrique subi, meme si le brouillage est susceptible d’en

 Copyright @ 2023 Peplink

CE Statement for Pepwave Routers (SIM Injector Mini)

DECLARATION OF CONFORMITY

We affirm the electrical equipment manufactured by us fulfils the requirements of the Radio Equipment Directive 2014/53/EU.

Name of manufacturer	PISMO LABS TECHNOLOGY LIMITED
Contact information of the manufacturer	A8, 5/F, HK Spinners Ind. Bldg., Phase 6, 481 Castle Peak Road, Cheung Sha Wan, Kowloon, Hong Kong tel. (852) 2990 7600, fax. (852) 3007 0588 e-mail: cs@peplink.com
Description of the appliance	Peplink Pepwave Product
Model name of the appliance	SIM Injector Mini SIM-MINI-8-1E
Trade name of the appliance	peplink PEPWAVE

 Copyright @ 2023 Peplink

 Copyright @ 2023 Peplink

The construction of the appliance is in accordance with the following standards:

EN 55032:2015 / A1:2020
EN 55035:2017 / A11:2020
EN IEC 61000-3-2:2019/A1:2021
EN 61000-3-3:2013/A2:2021
EN IEC 62368-1:2020 + A11:2020

Yours sincerely,

PISMO LABS TECHNOLOGY LIMITED

Antony Chong
Director of Hardware Engineering
Peplink International Limited

 Copyright @ 2023 Peplink

	AT	BE	BG	HR	CY	CZ	DK	EE	FI	FR	DE	EL	HU	IE
	IT	LV	LT	LU	MT	NL	PL	PT	RO	SK	SI	ES	SE	UK(NI)

contact as: https://www.peplink.com/

 Copyright @ 2023 Peplink

UK Statement for Pepwave Routers (SIM Injector Mini)

UK DECLARATION OF CONFORMITY

Name of manufacturer	PISMO LABS TECHNOLOGY LIMITED
Contact information of the manufacturer	A8, 5/F, HK Spinners Ind. Bldg., Phase 6, 481 Castle Peak Road, Cheung Sha Wan, Kowloon, Hong Kong tel. (852) 2990 7600, fax. (852) 3007 0588 e-mail: cs@peplink.com
Description of the appliance	Peplink Pepwave Product
Model name of the appliance	SIM Injector Mini SIM-MINI-8-1E
Trade name of the appliance	peplink PEPWAVE

 Copyright @ 2023 Peplink

We declare under sole responsibilities that the above product conforms to the applicable requirements of following relevant UK legislation and designed standards.

UK legislation

Electromagnetic Compatibility Regulations 2016
Electrical Equipment (Safety) Regulations 2016

UK Designed Standard

EN 55032:2015 / A1:2020
EN 55035:2017 / A11:2020
EN IEC 61000-3-2:2019/A1:2021
EN 61000-3-3:2013/A2:2021
EN IEC 62368-1:2020 + A11:2020

Yours sincerely,

PISMO LABS TECHNOLOGY LIMITED

Antony Chong
Director of Hardware Engineering
Peplink International Limited

 Copyright @ 2023 Peplink